P/N	APPLICABLE NOTE(S)	∅ A	B	C	D
P604-1CC	1 3	.089 MIN.	.265	.205	NA
P604-2CC	1 2 3	.049 MIN.	.230	.190	.135

REVISION HISTORY

ECO	REV.	DESCRIPTION	DRAWN BY	DATE
12730	E	-	HDB	03.05.01
18995	F	-	DKN	02.02.06
23219	G	-	K.NG	05.28.10
205816	H	REDRAWN IN SW	PAW	07.22.26

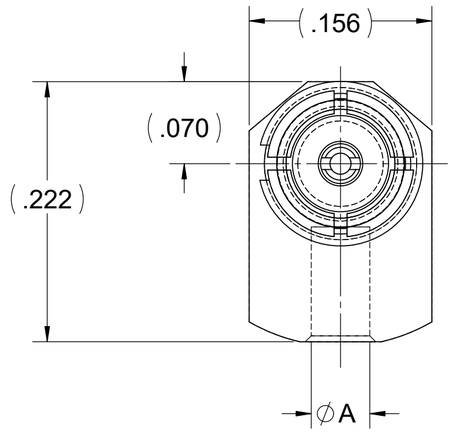

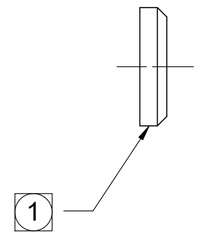

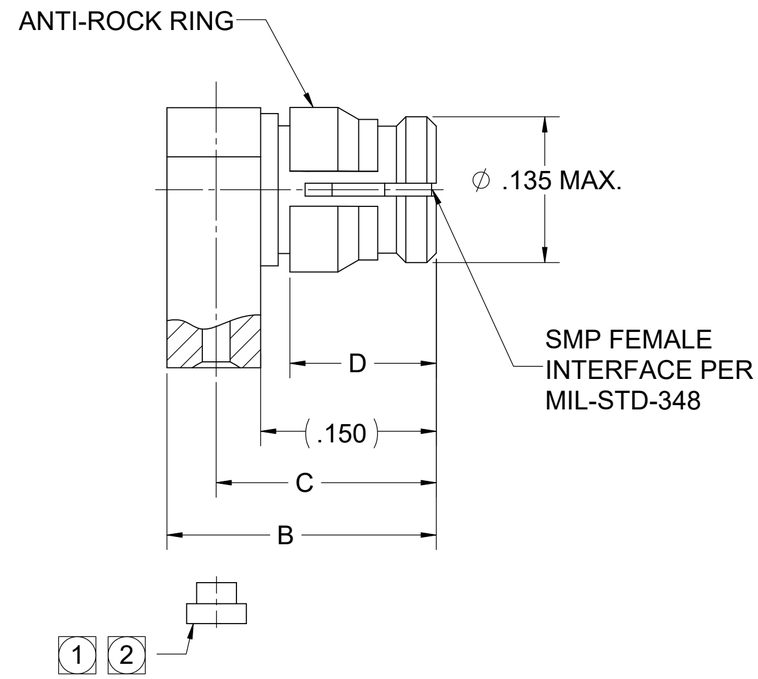

NOTE(S):

1. CAP TO BE PACKAGED AND SHIPPED UNASSEMBLED.
2. DIELECTRIC STOP IS REQUIRED FOR P604-2CC AND TO BE PACKAGED AND SHIPPED UNASSEMBLED.
3. OUTLINE DRAWING REVISION IS INDEPENDENT OF PRODUCTION REVISION.

MATERIAL(S):

BODY:
BeCu ALLOY PER ASTM B-196.
CENTER CONDUCTOR:
BeCu ALLOY PER ASTM B-196.
ANTI-ROCK RING & CAP:
BeCu ALLOY PER ASTM B-196.
DIELECTRIC:
PTFE PER ASTM D-1710.
DIELECTRIC STOP (-2CC):
TORLON PER ASTM D-5204
OR MIL-P-46179.

ELECTRICAL(S):

IMPEDANCE: 50 OHMS NOMINAL.
FREQUENCY RANGE: DC TO 18.0 GHz.
VSWR: 1.20:1 MAX TO 18.0 GHz.
INSERTION LOSS: .04 X √f(GHz).
WORKING VOLTAGE: 335 Vrms @ SEA LEVEL
65 Vrms @ 70,000 ft.
DIELECTRIC WITHSTANDING VOLTAGE:
500 Vrms MIN.
R.F. HiPOT VOLTAGE: 325 Vrms MIN @ 5MHz.
CORONA LEVEL: 190 Vrms @ 70,000 ft.
INSULATION RESISTANCE: 5,000 MEGOHMS MIN.
CONTACT RESISTANCE:
CENTER CONDUCTOR: 6.0 mOHMS MAX.
OUTER CONDUCTOR: 2.0 mOHMS MAX.
R.F. LEAKAGE: -80 dB MAX TO 3.0 GHz.

MECHANICAL(S):

MATING CHARACTERISTICS:
INTERFACE PER MIL-STD-348.
FORCE TO ENGAGE & DISENGAGE:
ENGAGE:
FULL DETENT: 15 lbs MAX.
LIMITED DETENT: 10 lbs MAX.
SMOOTH BORE: 2 lbs MAX.
DISENGAGE:
FULL DETENT: 5 lbs MIN.
LIMITED DETENT: 2 lbs MIN.
SMOOTH BORE: .5 lbs MIN.
CENTER CONTACT RETENTION:
AXIAL FORCE: 1.5 POUNDS MIN.
RADIAL TORQUE: NA.
CONNECTOR DURABILITY:
FULL DETENT: 100 CYCLES MIN.
LIMITED DETENT: 500 CYCLES MIN.
SMOOTH BORE: 1,000 CYCLES MIN.

ENVIROMENTAL(S):

TEMPERATURE RANGE: -65˚C TO +165˚C.
THERMAL SHOCK:
MIL-STD-202, METHOD 107, TEST COND. B.
MOISTURE RESISTANCE:
MIL-STD-202, METHOD 106, EXCEPT STEP 7B SHALL BE OMITTED. INSULATION RESISTANCE AT LEAST 1,000 MEGOHMS WITHIN 5 MINUTES AFTER REMOVAL FROM HUMIDITY.
CORROSION:
MIL-STD-202, METHOD 101, TEST COND. B.
VIBRATION:
MIL-STD-202, METHOD 204, TEST COND. D.
SHOCK:
MIL-STD-202, METHOD 213, TEST COND. I.

FINISH(ES):

BODY, CENTER CONDUCTOR, CAP & ANTI-ROCK RING:
GOLD PLATE PER ASTM B-488, OVER NICKEL PLATE PER SAE AMS-QQ-N-290, CLASS 1.

RoHS 3 Compliant EU 2015/863

APPLICABLE Amphenol CDI DOCUMENTS

WORK STANDARD	PROD INSTRUC	ASSY INSTRUC
NA	NA	NA

THE INFORMATION CONTAINED HEREIN IS PROPRIETARY TO AMPHENOL. AND SHALL IN NO WAY BE REPRODUCED OR DISCLOSED IN WHOLE OR IN PART OR USED FOR ANY DESIGN OR MANUFACTURE EXCEPT WHEN SUCH USER POSSESSES DIRECT, WRITTEN AUTHORIZATION FROM AMPHENOL.

TOLERANCES AND NOTES
EXCEPT AS NOTED
DIMENSIONS ARE IN INCHES.
LINEAR .XX ±.015 / .XXX ±.005
FRACTION ± 1/32 ANGULAR ± 1/2°
1. INTERPRET DRAWING PER ASME Y14.5 - 2018
MACHINE FINISH: 63 RMS
2. BREAK ALL SHARP EDGES .003 MAX.
3. MACHINED FILLETS .005 MAX.
4. MACHINED SURFACES SQUARE TO RESPECTIVE AXIS WITHIN .005 INCHES PER INCH.
5. MACHINED DIAMETERS CONCENTRIC WITHIN .002 T.I.R.
6. DIMENSIONS TO BE MET AFTER PLATING.
7. CHAMFER ALL THREADS 45°.
8. THREADS PER H-28
9. REMOVE FRAYED EDGES ON TEFLON.
10. REMOVE ALL BURRS.

MATERIAL		
APPROVAL	INITIALS	DATE
DRAWN BY	DKN	05/17/99

SEE ECO FOR APPROVAL SIGNATURES

-	-	-
MATERIAL	SPECIFICATION	PROCUREMENT

Amphenol CDI 12900 Alondra Blvd. Cerritos, CA 90703

TITLE SMP FEMALE MITER R/A TO SEMI-RIGID CABLE (18 GHz)

SCALE 10:1 | SHEET 1 OF 1

SIZE	CAGE CODE	DRAWING NO.	REV.
C	30990	P604	H

ENG-SW REV. L