P/N
CC
CCSF

REVISION HISTORY				
ECO	REV.	DESCRIPTION	DRAWN BY	DATE
20921	A	INITIAL RELEASE	DKN	01.24.08
33337	B	-	KM	01.26.18
206125	C	REDRAWN IN SW	PAW	06.22.26

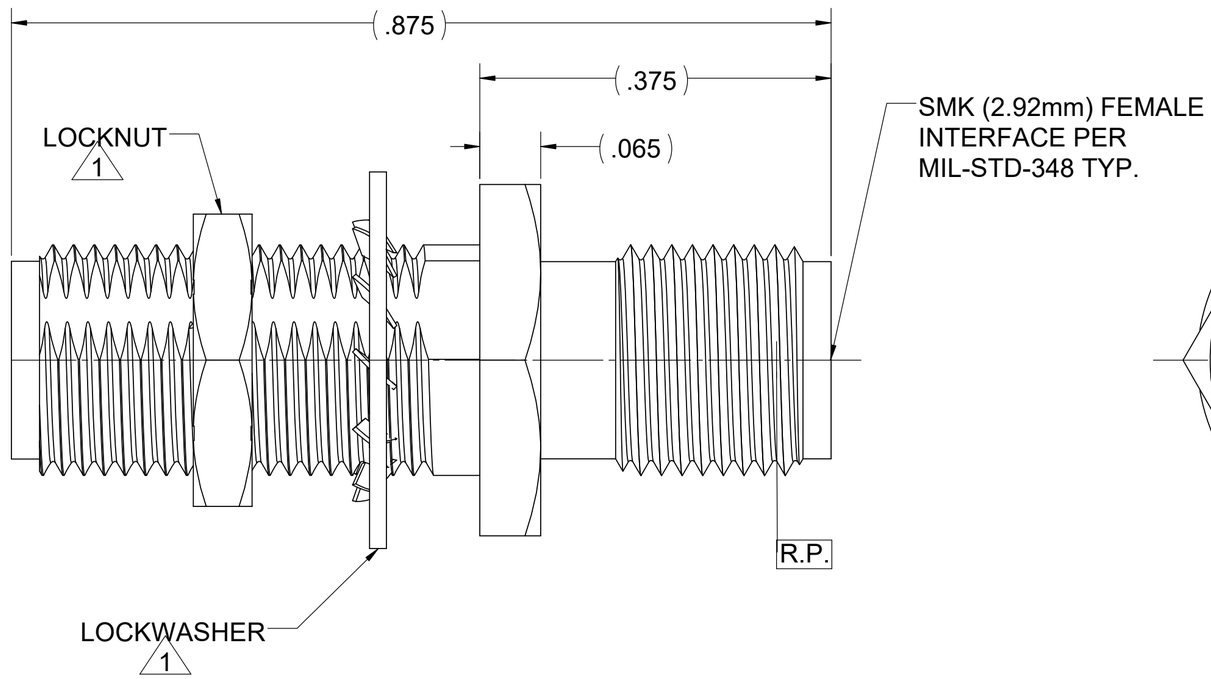

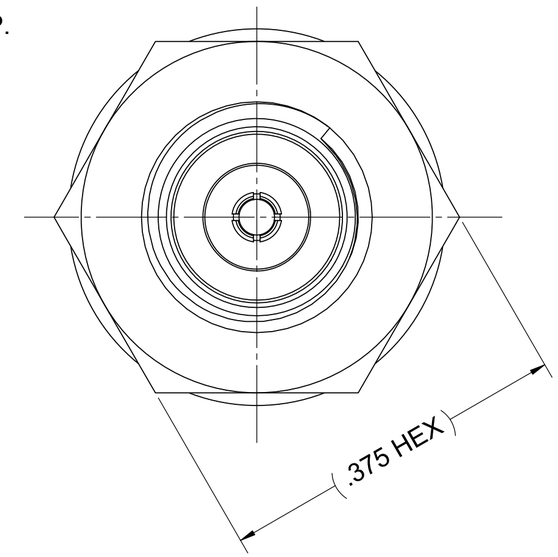

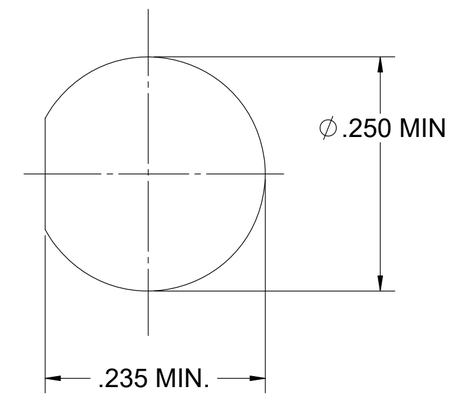

RECOMMENDED MOUNTING HOLE

NOTE(S):

1. LOCKNUT AND LOCKWASHER TO BE PACKAGED AND SHIPPED UNASSEMBLED.
2. OUTLINE DRAWING REVISION IS INDEPENDENT OF PRODUCTION REVISION.

MATERIAL(S):

BODY INSERT & LOCKNUT:
303 SST PER ASTM A-582
CENTER CONDUCTOR:
BeCu ALLOY PER ASTM B-196
LOCKWASHER:
STAINLESS STEEL 410
BEAD:
(HIGH PERFORMANCE APPLICATION)

ELECTRICAL(S):

IMPEDANCE: 50 OHMS NOMIAL.
FREQUENCY RANGE: DC TO 40.0 GHz
VSWR: 1.10 + .005 x f(GHz)
INSERTION LOSS: .08 x√f(GHz) dB
WORKING VOLTAGE: 500 Vrms MAX@SEA LEVEL
DIELECTIRC WITHSTANDING VOLTAGE:
1500 Vrms MIN
R.F. HiPOT VOLTAGE: 1000 Vrms MIN @ 5MHZ
CORONA LEVEL: 375 Vrms @ 70,000 ft.
INSULATION RESISTANCE: 5000 MEGOHMS MIN.
R.F. LEAKAGE: -90 dB MIN FROM 2 TO 3 GHz
CONTACT RESISTANCE:
BEFORE ENVIRONMENTAL: 3.0 Milliohms
AFTER ENVIRONMENTAL: 4.0 Milliohms

MECHANICAL(S):

MATING CHARACTERISTICS:
INTERFACE PER MIL-STD-348
FORCE TO ENGAGE & DISENGAGE:
TORQUE: 2 INCH-POUNDS MAX
CONNECTOR DURABILITY:
500 CYCLES MIN @12 CYCLES/MINUTE MAX
CENTER CONTACT RETENTION:
AXIAL FORCE: 6 PUNDS MIN
N/A RADIAL
CONCENTRICITY BETWEEN CENTER
CONDUCTOR AND BODY .005" MAX.

ENVIROMENTAL(S):

TEMPERATURE RANGE: -65°C TO +165°C
THERMAL SHOCK:
MIL-STD-202, METHOD 107, TEST COND. B
MOISTURE RESISTANCE:
MIL-STD-202, METHOD 106, INSULATION
RESISTANCE AT LEAST 200 MEGOHMS
WITHIN 5 MINUTES AFTER REMOVAL
FROM HUMIDITY.
CORROSION:
MIL-STD-202, METHOD 101, TEST COND. B
VIBRATION:
MIL-STD-202, METHOD 204, TEST COND. D
SHOCK:
MIL-STD-202, METHOD 213, TEST COND. I

FINISH(ES):

BODY, INSERT, LOCKNUT & LOCKWASHER:
(for CCSF's): PASSIVATE PER ASTM A-967, NITRIC 1.
(for CC's): GOLD PLATE PER ASTM B-488, OVER NICKEL PLATE
PER AMS-QQ-N-290.
CENTER CONDUCTOR:
GOLD PLATE PER ASTM B-488, OVER NICKEL PLATE
PER AMS-QQ-N-290.

RoHS 3 Compliant EU 2015/863

APPLICABLE Amphenol CDI DOCUMENTS

WORK STANDARD	PROD INSTRUC	ASSY INSTRUC
NA	NA	NA

THE INFORMATION CONTAINED HEREIN IS PROPRIETARY TO AMPHENOL. AND SHALL IN NO WAY BE REPRODUCED OR DISCLOSED IN WHOLE OR IN PART OR USED FOR ANY DESIGN OR MANUFACTURE EXCEPT WHEN SUCH USER POSSESSES DIRECT, WRITTEN AUTHORIZATION FROM AMPHENOL.

TOLERANCES AND NOTES
EXCEPT AS NOTED
DIMENSIONS ARE IN INCHES.
LINEAR .XX ±.015 / .XXX ±.005
FRACTION ± 1/32 ANGULAR ± 1/2°
1. INTERPRET DRAWING PER ASME Y14.5 - 2018
MACHINE FINISH: 63 RMS
2. BREAK ALL SHARP EDGES .003 MAX.
3. MACHINED FILLETS .005 MAX.
4. MACHINED SURFACES SQUARE TO RESPECT-IVE AXIS WITHIN .005 INCHES PER INCH.
5. MACHINED DIAMETERS CONCENTRIC WITHIN .002 T.I.R.
6. DIMENSIONS TO BE MET AFTER PLATING.
7. CHAMFER ALL THREADS 45°.
8. THREADS PER H-28
9. REMOVE FRAYED EDGES ON TEFLON.
10. REMOVE ALL BURRS.

MATERIAL		
APPROVAL	INITIALS	DATE
DRAWN BY	R.C.	03/13/02

SEE ECO FOR APPROVAL SIGNATURES

-	-	-
MATERIAL	SPECIFICATION	PROCUREMENT

Amphenol CDI 12900 Alondra Blvd. Cerritos, CA 90703

TITLE SMK (2.92mm) FEMALE TO SMK FEMALE BULKHEAD STRAIGHT ADAPTER

SCALE	SHEET	OF	SIZE	CAGE CODE	DRAWING NO.	REV.
8:1	1	1	C	30990	226	C

ENG-SW REV. L