PART NO.	APPLICABLE NOTE(S)	(Ø A)	INTERFACE(S)	FIGURE(S)
P698-1CC	1,2,3,4	(.116)	FULL DETENT	1
P698-2CC	1,2,3,4	(.120)	LIMITED DETENT	1
P698-3CC	1,2,3,4	(.125)	SMOOTH BORE	1
P698-4CC	1,2,3,4	(.125)	CATCHERS MITT	2
P698-1CCT	1,2,3,4	(.116)	FULL DETENT	1, VIEW A
P698-2CCT	1,2,3,4	(.120)	LIMITED DETENT	1, VIEW A
P698-3CCT	1,2,3,4	(.125)	SMOOTH BORE	1, VIEW A
P698-4CCT	1,2,3,4	(.125)	CATCHERS MITT	2 , VIEW A

REVISIONS			
REV.	DESCRIPTION	DATE	BY
G	ECO 21365	06.16.08	DKN
H	ECO 35547 (add new p/n's)	03.11.20	DT
J	ECO 202352 (ADD NEW NAME)	11.26.24	DKN
K	ECO 206406 (UPDATE FORMAT)	08.06.26	PAW

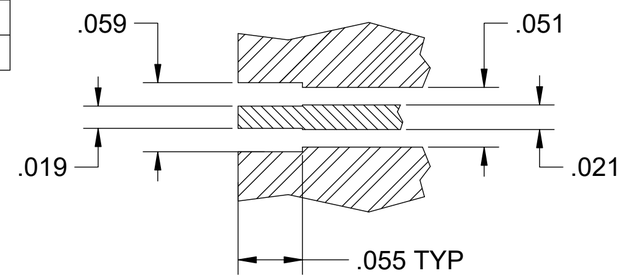

RECOMMENDED PCB MOUNTING PATTERN

(1)

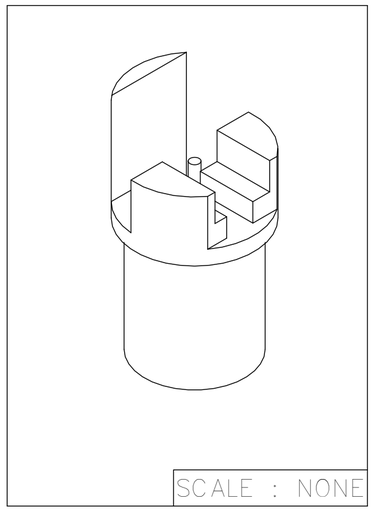

NOTE(S) :

(1) DIMENSIONS SHOWN ARE FOR ROGERS 4350 PCB MATERIAL.
THESE DIMENSIONS MAY VARY DEPENDING ON PCB MATERIAL USED.

(2) POST AND CONTACT AREA NOTED TO BE PRE-TINNED USING Sn63Pb37 SOLDER.

(3) PERMISSIBLE EXCESS SOLDER FLOW DUE TO MANUFACTURING PROCESS.

4 OUTLINE DRAWING REVISION IS INDEPENDENT OF PRODUCTION REVISION.

MATERIAL(S):

Body & Center Conductor :
BeCu Alloy per ASTM B-196.
Dielectric :
PTFE per ASTM D-1710.

ELECTRICAL(S):

Impedance: 50 Ohms Nominal
Frequency Range: DC - 40 GHz
VSWR: 1.25:1 max DC - 26.5 GHz
1.40:1 max 26.5 - 40 GHz
Insertion Loss: .01 x SQRT(f (GHz)) dB.
Working Voltage: 600 Vrms @ Sea Level
150 Vrms @ 70000 ft.
Dielectric Withstand Voltage: 500 Vrms min.
RF HiPot Voltage: 325 Vrms min. @ 5MHz
Corona Level: 190 Vrms @ 70,000 ft
Insulation Resistance: 5,000 MegOhms.
Contact Resistance:
Center Contact: 4.0 Milliohms max
Outer Contact: 2.0 Milliohms max
R.F Leakage : -80 dB max to 3 GHz.
-60 dB max to 18 GHz.

MECHANICAL(S):

Mating Characteristics:
Interface per MIL-STD-348.
Force to Engage and Disengage :

	Engage	Disengage
Full Detent :	10 lbs max	5 lbs min
Limited Detent :	8 lbs max	2 lbs min
Smooth Bore:	2 lbs max	.5 lbs min

Center Contact Retention :
Axial Force : 1.5 pounds min.
Note : 10lbs min, when c/c is solder-on to PCB
Radial Torque : NA .
Connector Durability :
Full Detent : 100 Cycles
Limited Detent : 500 Cycles
Smooth Bore : 1000 Cycles
Connector Attachment Strengh:
20 lbs max (depend on the solder techniques)

ENVIROMENTAL(S):

Temperature Range: -65°C to +165°C
Thermal Shock:
MIL-STD-202, Method 107, Test Cond C
Moisture Resistance:
MIL-STD-202, Method 106, Except step 7b shall be omitted. Insulation resistance at least 1000 MegOhms within 5 minutes after removal from humidity.
Corrosion:
MIL-STD-202, Method 101, Test Cond B
Vibration:
MIL-STD-202, Method 204, Test Cond D
Shock:
MIL-STD-202, Method 213, Test Cond I

FINISH(ES):

Body & Center Conductor:
Gold plate per ASTM B-488, Type II, Code C or D, over Nickel under plate per SAE-AMS-QQ-N-290, Class 1.

Notice: For Pre-Tinned version, area on Body and Center Conductor shown to be de-golded using Sn63Pb37.

RoHS 3 Compliant EU 2015/863

APPLICABLE Amphenol CDI DOCUMENTS		
WORK STANDARD	PROD INSTRUC	ASSY INSTRUC
NA	NA	NA

THE INFORMATION CONTAINED HEREIN IS PROPRIETARY TO AMPHENOL. AND SHALL IN NO WAY BE REPRODUCED OR DISCLOSED IN WHOLE OR IN PART OR USED FOR ANY DESIGN OR MANUFACTURE EXCEPT WHEN SUCH USER POSSESSES DIRECT, WRITTEN AUTHORIZATION FROM AMPHENOL.

TOLERANCES AND NOTES
EXCEPT AS NOTED
DIMENSIONS ARE IN INCHES.
LINEAR .XX ±.015 / .XXX ±.005
FRACTION ± 1/32 ANGULAR ± 1/2°
1. INTERPRET DRAWING PER ASME Y14.5 - 2018
MACHINE FINISH: 63 RMS
2. BREAK ALL SHARP EDGES .003 MAX.
3. MACHINED FILLETS .005 MAX.
4. MACHINED SURFACES SQUARE TO RESPECTIVE AXIS WITHIN .005 INCHES PER INCH.
5. MACHINED DIAMETERS CONCENTRIC WITHIN .002 T.I.R.
6. DIMENSIONS TO BE MET AFTER PLATING.
7. CHAMFER ALL THREADS 45°.
8. THREADS PER H-28
9. REMOVE FRAYED EDGES ON TEFLON.
10. REMOVE ALL BURRS.

MATERIAL		
APPROVAL	INITIALS	DATE
DRAWN BY	ATV	08/09/99

SEE ECO FOR APPROVAL SIGNATURES

-	-	-
	SPECIFICATION	PROCUREMENT

Amphenol CDI 12900 Alondra Blvd. Cerritos, CA 90703

TITLE SMP MALE PCB EDGE MOUNT TO STRAIGHT TERMINATION

SCALE 16:1 SHEET 1 OF 2

SIZE	CAGE CODE	DRAWING NO.	REV.
C	30990	P698	K

ENG-SW REV. L

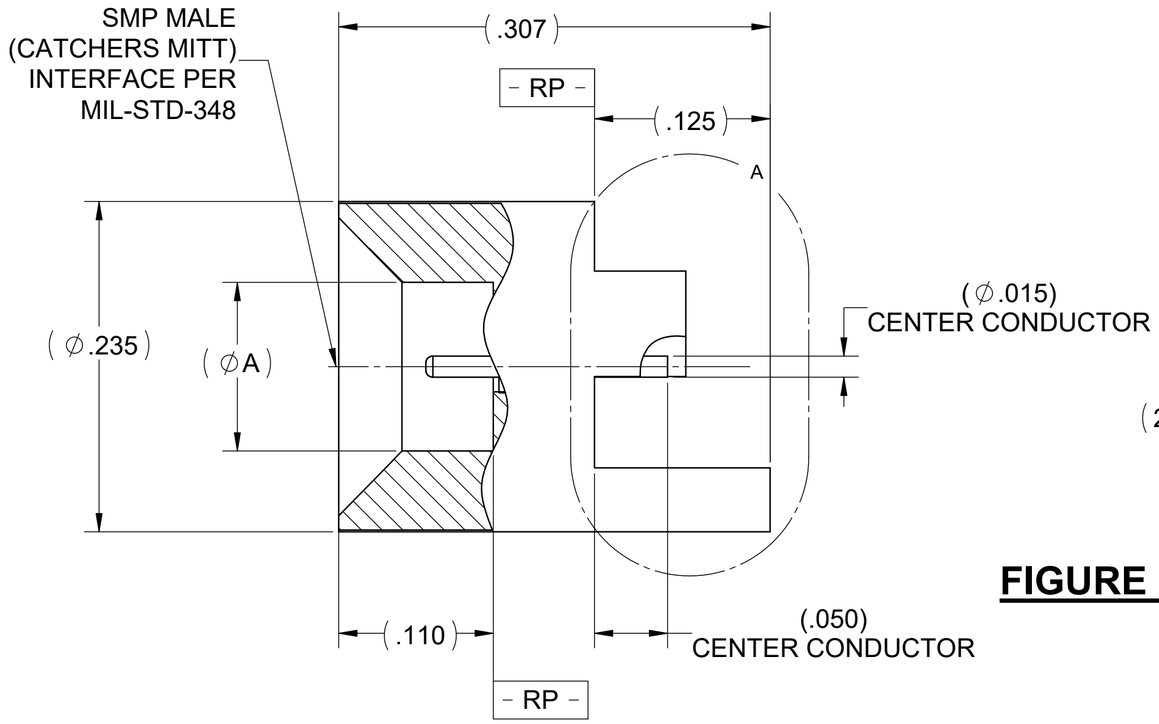

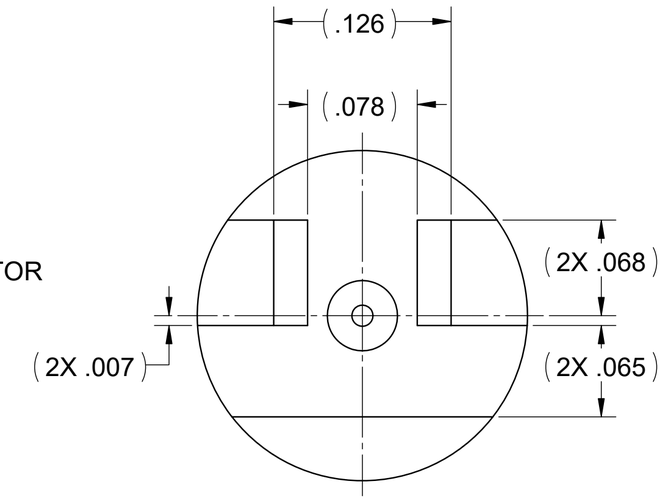

FIGURE 2

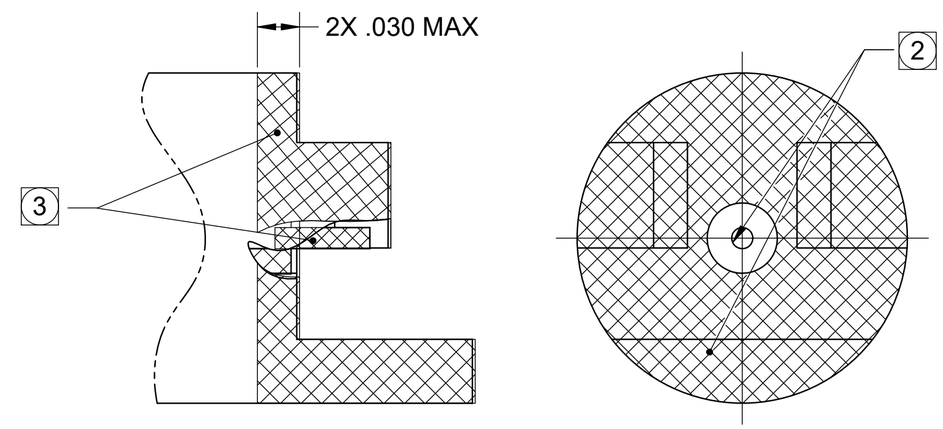

VIEW A

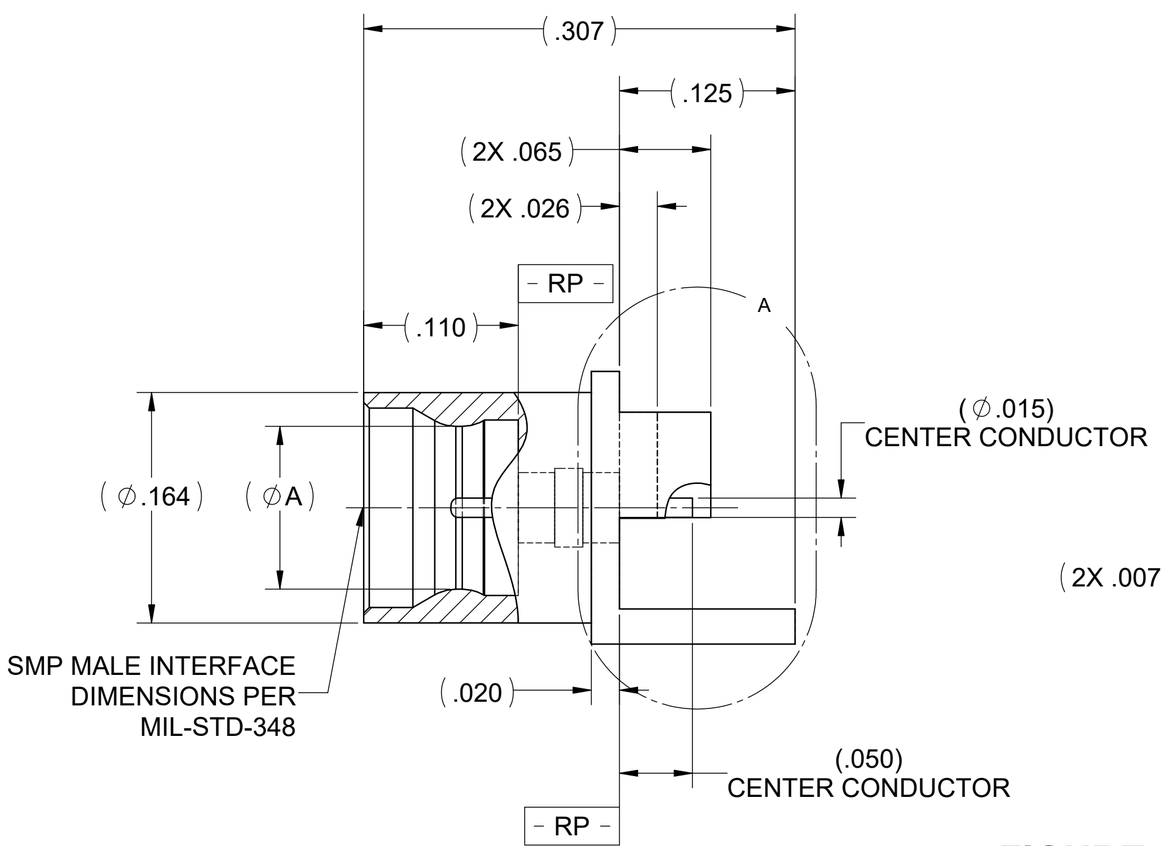

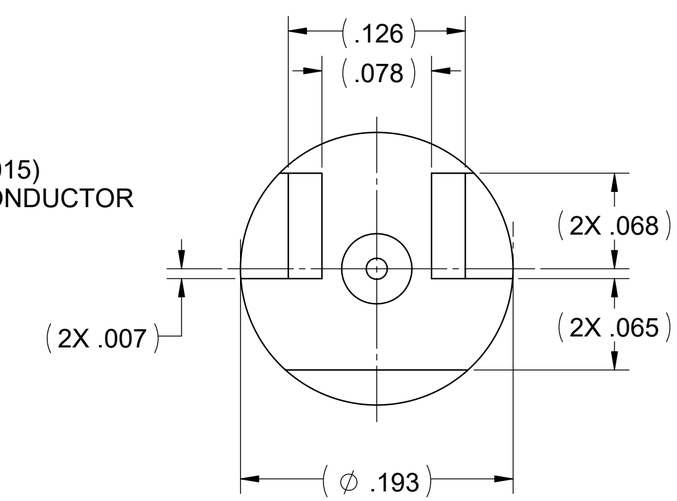

FIGURE 1

Amphenol CDI	SMP MALE PCB EDGE MOUNT TO STRAIGHT TERMINATION	SIZE C	CAGE CODE 30990	PART NUMBER P698	REV K
		SCALE: 12:1		PART NUMBER: P698	2 OF 2