P/N	INTERFACE	(Ø A)	(B)	(C)
−1CC	FULL DETENT	.116	.125	.287
−2CC	FULL DETENT	.116	.115	.297
−3CC	FULL DETENT	.116	.155	.337

REVISIONS			
REV	DESCRIPTION	DATE	BY
C	ECO 12858	03/02/01	HDB
D	ECO 35621	04.14.2020	DKN
E	ECO 202352 (ADD NEW NAME)	11.26.24	DKN

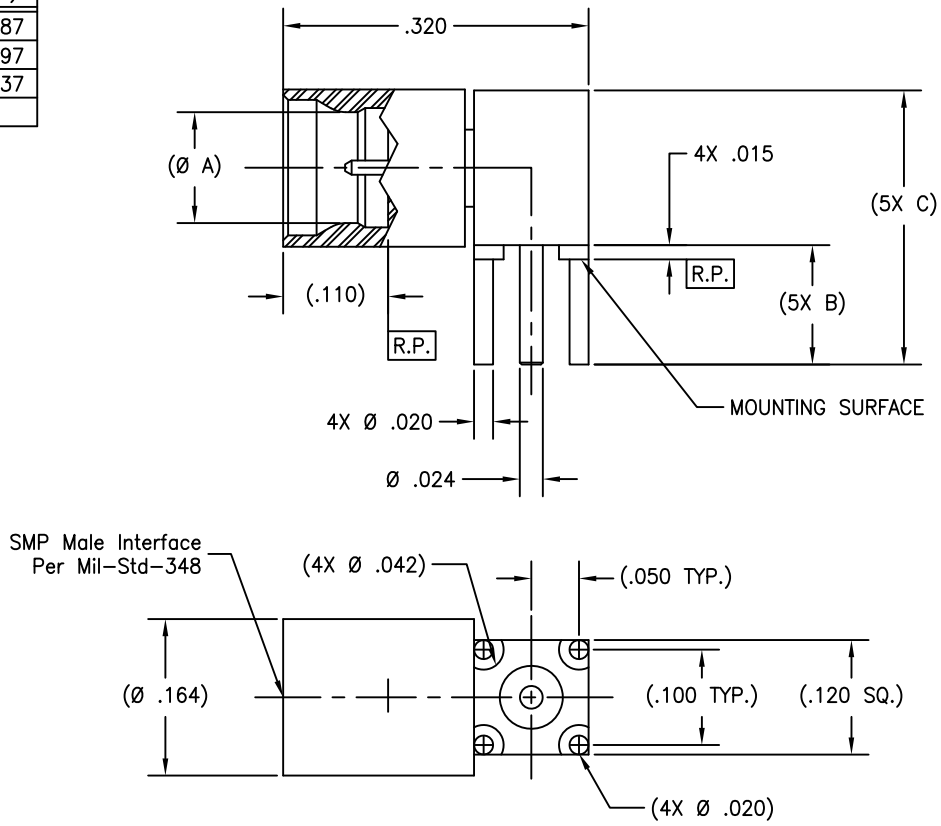

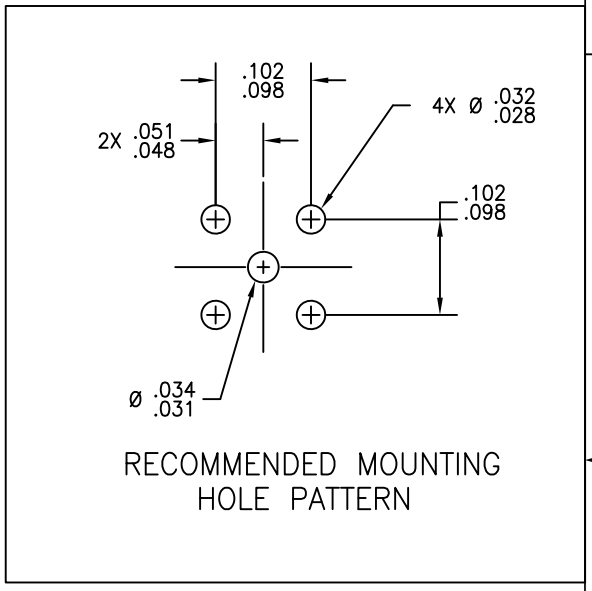

MATERIAL(S):

SMP Body:
303 SST per ASTM A−582.
Insert & Center Conductor:
BeCu Alloy per ASTM B−196.
Insulator:
PTFE Teflon per ASTM D−1710.

ELECTRICAL:

Impedance: 50 Ohms nominal.
Frequency Range: DC to 12 GHz.
VSWR: 1.35:1 max to 12 GHz.
Insertion Loss: 0.15 dB max to 12 GHz.
Working Voltage: 335 Vrms max @ sea level.
Dielectric Withstanding Voltage: 500 Vrms min.
R.F. HiPot Voltage: 325 Vrms min @ 5MHz.
Corona Level: 125 Vrms @ 70,000 ft.
Insulation Resistance: 5,000 MegOhms min.
Contact Resistance:
Center Contact: 6.0 Milliohm max.
Outer Contact: 2.0 Milliohm max.
R.F. Leakage: −(65 − fGHz) dB min.

MECHANICAL:

Mating Characteristics:
Interface per Mil−Std−348.
Force To Engage & Disengage:
Full Detent:
Engage: 15.0 pounds max.
Disengage: 5.0 pounds min.
Connector Durability:
Full Detent: 100 cycles min.

ENVIRONMENTAL:

Temperature Range: −65°C to +165°C.
Thermal Shock:
Mil−Std−202, Method 107, Test Cond. B.
Moisture Resistance:
Mil−Std−202, Method 106, except step 7b shall be omitted. Insulation resistance at least 1,000 MegOhms within 5 minutes after removal from humidity.
Corrosion:
Mil−Std−202, Method 101, Test Cond. B.
Vibration:
Mil−Std−202, Method 204, Test Cond. D.
Shock:
Mil−Std−202, Method 213, Test Cond. I.

FINISH(ES):

Insert (R/A) & Center Conductor:
Gold plate per ASTM B−488, type II, code C or D, class 1.25, over nickel under plate per AMS−QQ−N−290, class 1.

SMP Body:
Passivated per ASTM A−967.

APPLICABLE Amphenol CDI DOCUMENTS

WORK STD	PROD INST	ASSY INST
NA	NA	NA

NOTICE

THIS DRAWING EMBODIES A CONFIDENTIAL PROPRIETARY DESIGN ORIGINATED BY Amphenol CDI AND ALL DESIGN, MANUFACTURING, RE−PRODUCTION, USE AND SALE RIGHTS REGARDING THE SAME ARE EXPRESSLY RESERVED. IT IS SUBMITTED UNDER A CONFIDENTIAL RELATIONSHIP FOR A SPECIFIED PURPOSE AND THE RECIPIENT AGREES BY ACCEPTING THIS DRAWING NOT TO SUPPLY OR DISCLOSE ANY INFORMATION REGARDING IT TO ANY UNAUTHORIZED PERSON TO INCORPORATE INOTHER PROJECTS ANY SPECIAL FEATURE PECULIAR TO THIS DESIGN. ALL PATENT RIGHTS HERETO ARE EXPRESSLY RESERVED BY Amphenol CDI, Cerritos, CA 90703

TOLERANCES AND NOTES EXCEPT AS NOTED

INTERPRET DRAWING PER ASME Y14.5−2018

DIMENSIONS ARE IN INCHES:
LINEAR .XX ±.015
.XXX ±.005
ANGULAR ± 1/2°
FRACTION ± 1/32

1. MACHINE FINISH: 63/RMS
2. BREAK ALL SHARP EDGES .003 MAX.
3. MACHINED FILLETS .005 MAX.
4. MACHINED SURFACES SQUARE TO RESPECTIVE AXIS WITHIN .005 INCHES PER INCH.
5. MACHINED DIAMETERS CONCENTRIC WITHIN .002 T.I.R.
6. DIMENSIONS TO BE MET BEFORE PLATING.
7. CHAMFER ALL THREADS 45°.
8. THREADS PER H−2B.
9. REMOVE FRAYED EDGES ON TEFLON.
10. REMOVE ALL BURRS.

MATERIAL			–	–	–
APPROVAL INITIALS		DATE	SPECIFICATION		PROCUREMENT
DRAWN BY	ATV	08.06.09	Amphenol CDI		12900 Alondra Blvd. Cerritos, CA 90703
CHECKED BY			TITLE	SMP MALE, PCB SURFACE MOUNT MITER R/A	
TEST ENGG					
QUALITY					
DESIGN ENGG	ATV	12.19.01	SCALE 10:1	DIRECTORY\SUB−DIRECTORY _OUTLINE	SHEET 1 OF 1
MFG ENGG			SIZE C	CAGE CODE 30990	DRAWING NO. P646 REV. E
ECO APPRV	DNg	11.26.24			

ENG−DWG REV. H